DHV Industries, Inc.
3451 Pegasus Drive
Bakersfield. CA 93308 U.S.A.
Call Toll Free: (877) DHV-USA1
Phone: (661) 392-8948
Fax: (661) 392-8947
E-mail: sales@dhvindustries.com
Website: www.dhvindustries.com

DHV Valve Company Inc.
10401 South Sam Houston Pkwy
West Houston, TX. 77071 U.S.A.
Call Toll Free: 884-828-2169
Tel: 346-304-2968
Fax: 346-304-2971
E-mail: sales@dhvvalve.com
Website: www.dhvvalve.com

Parallel Slide Gate Valve

Catalogue No: A1-05

DHV Figure Numbers

DHV Figure Numbers 1
Features ..... 2~3
Component Parts Lists *(Bolted Bonnet)* 4
Material Specification *(Bolted Bonnet)* 5
Component Parts Lists *(Pressure Seal Bonnet)* 6
Material Specification *(Pressure Seal Bonnet)* 7
Dimensions And Weights ..... 8~10

Example: 8″-C120F2-GO

Code
C = Cast Steel Valves

Type C
1= OS & Y Gate
5 = Pressure Seal Bonnet Gate

Pressure Class
1 = Class 150
2 = Class 300
3 = Class 600
4 = Class 900
5 = Class 1500
6 = Class 2500

Body and Bonnet Material
0 = ASTM A216 WCB
1 = ASTM A216 WCC
2 = ASTM A352 LCB
3 = ASTM A352 LCC
4 = ASTM A351 CF8M
5 = ASTM A351 CF8
6 = ASTM A351 CF3M
7 = ASTM A351 CF3
8 = ASTM A890 4A
X = Special

Trim Material

	Seat Seal Face	Disc Seal Face	Stem Material
1 =	13CR	13CR	F6
2 =	HF	HF	F6
3 =	HF	13CR	F6
4 =	Monel	Monel	Monel
5 =	316 SS	316 SS	F316
6 =	HF	316 SS	F316
7 =	304 SS	304 SS	F304
8 =	HF	304 SS	F304
9 =	Inconel	Inconel	Inconel
A =	HF	HF	F316
B =	Duplex S.S.		
X =	Special		

End Connections
F = Raised Face Flanged End
R = Ring Type Joint Flanged End
P = Plain Flate Face Flanged End
B = Butt-welding End
T = Threaded End
S = Socket-welding End
W= Wafer-Type
L = Lug-Tpye or Full Flange
D = Double Flange-Type
X = Other Type End Connection

Operator
None = Lever or Handwheel Operator
CO = Chain Wheel Operator
GO = Gear Operator
BS = Bare Stem
EM = Electric Motor Operator
PA = Pneumatic Actuator
HA = Hydraulic Actuator
PH = Pneumatic-Hydraulic Actuator

Features

Specifications

- Basic Design: ANSI B16.34
- Face to Face Standard: ANSI B16.10
- End Flanged Standard: ANSI B16.5
- Butt Weld End Standard: ANSI B16.25
- Test and Inspection Standard: API-598
- Stem Seal Complies to EPA/ISO/MESC Fugitive Emission Regulations

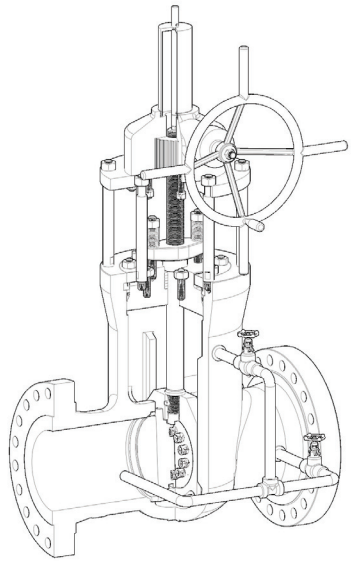

Main Application

- Fluid tightness achieved by fluid pressure – not from mechanical wedging which eliminates thermal binding
- Complete flow isolation in either direction – not true if installed with by-pass line
- Minimum pressure drop
- Inherent self cleaning action
- Freedom from leakage, independent of temperature or pressure changes
- In line maintenance

By-Pass

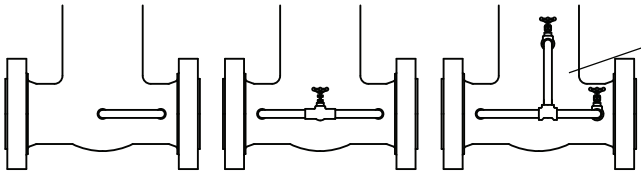

DHV Parallel Slide Gate Valves can be fitted with by-pass valves when specified by the customer. By-pass is a pipe outside the valve, connects the upstream and the downstream of the valve and can be opened or closed by the small by-pass valve to facilitate the operation of the main valve. The equalizer pipe avoids dangerous overpressure in the valve body when the valve is closed and the piping system is reheated.

V-Port

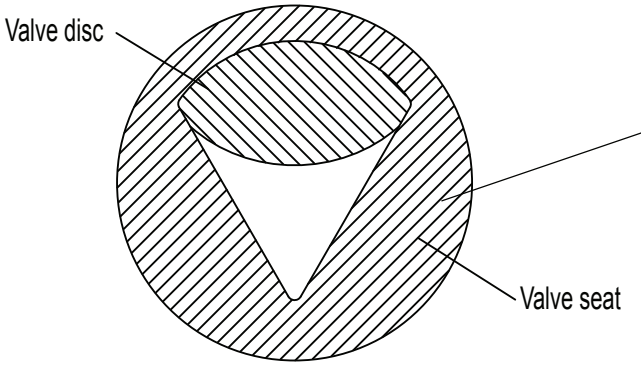

If a valve is required for flow regulation duties DHV can supply a parallel slide valve fitted with a “vee-ported” seat, and special pattern discs. The upstream seat is drilled to provide a pressure equalizing feature and the valve becomes unidirectional.

Features

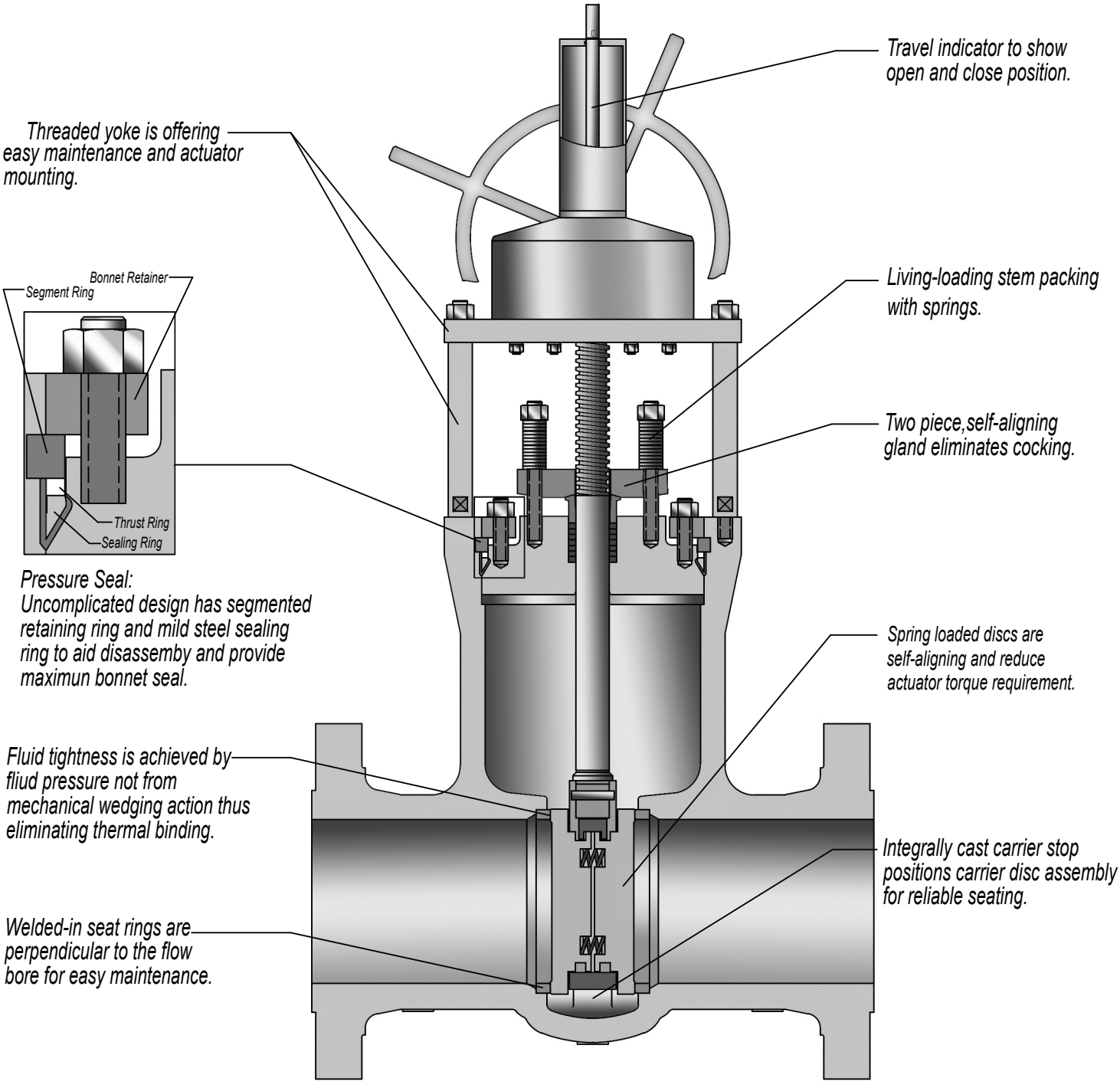
Travel indicator to show open and close position.
Threaded yoke is offering easy maintenance and actuator mounting.
Bonnet Retainer
Segment Ring
Living-loading stem packing with springs.
Two piece,self-aligning gland eliminates cocking.
Thrust Ring
Sealing Ring
Pressure Seal:
Uncomplicated design has segmented retaining ring and mild steel sealing ring to aid disassemby and provide maximun bonnet seal.
Spring loaded discs are self-aligning and reduce actuator torque requirement.
Fluid tightness is achieved by fliud pressure not from mechanical wedging action thus eliminating thermal binding.
Integrally cast carrier stop positions carrier disc assembly for reliable seating.
Welded-in seat rings are perpendicular to the flow bore for easy maintenance.

Component Parts Lists

Bolted Bonnet

No.	Part Name
1	Body
2	Bonnet
3	Disc
4	Disc Carrier
5	Seat
6	Stem
7	Back Seat
8	Gland
9	Gland Flange
10	Spacing Block
11	Adapter Plate
12	Stem Nut
13	Gear-box
14	Stem Protection
15	Yoke
16	Belleville Spring
17	Spring
18	Gasket
19	Pin
20	Packing

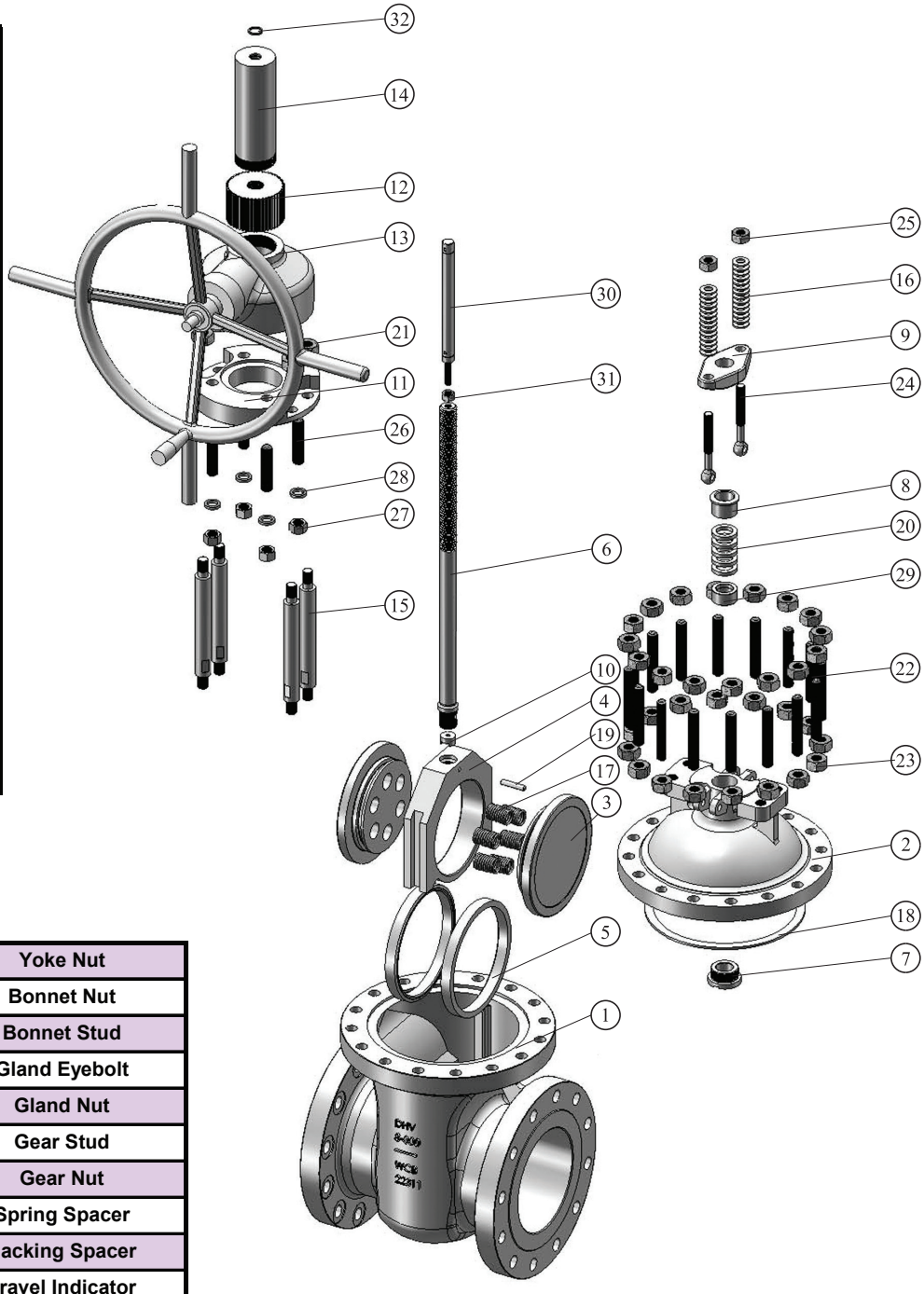

21	Yoke Nut
22	Bonnet Nut
23	Bonnet Stud
24	Gland Eyebolt
25	Gland Nut
26	Gear Stud
27	Gear Nut
28	Spring Spacer
29	Packing Spacer
30	Travel Indicator
31	Adjusting Nut
32	Anti-dust Ring

Material Specification

Bolted Bonnet

No.	Part Name	Carbon Steel	1.25% Cr	2.25% Cr	9Cr-1Mo-V	316SS
1	Body	ASTM A216 Gr WCB/WCC	ASTM A217 Gr WC6	ASTM A217 Gr WC9	ASTM A217 Gr C12A	ASTM A351 Gr CF8M
2	Bonnet	ASTM A105N	ASTM A182 Gr F11	ASTM A182 Gr F22	ASTM A182 Gr F91	ASTM A182 Gr F316
3	Disc	ASTM A182 Gr F316--W/CO-CR overLay				
4	Disc Carrier	ASTM A182 Gr F316				
5	Seat	ASTM A182 Gr F316--W/CO-CR overLay				
6	Stem	ASTM A705 Gr 630				
7	Back Seat	ASTM A182 Gr F316--W/CO-CR overLay				
8	Gland	ASTM A182 Gr F316				
9	Gland Flange	Carbon Steel				
10	Spacing Block	ASTM A182 Gr F316				
11	Adapter Plate	Carbon Steel				
12	Stem Nut	ASTM A439 Gr D-2C/ASTM B150 Alloy C61900				
13	Gear-box	Carbon Steel Body				
14	Stem Protection	Carbon Steel				
15	Yoke	ASTM A29 Gr 4130				
16	Spring	ASTM A564 UNS S17700				
17	Spring	ASTM B637 UNS N07500				
18	Gasket	Metal & Flexible Graphite				
19	Pin	ASTM A182 Gr F316				
20	Packing	Garlock1303 FEP				
21	Yoke Nut	ASTM A194 Gr 2H				
22	Bonnet Nut	ASTM A194 Gr 2H				
23	Bonnet Stud	ASTM A193 Gr B7				
24	Gland Eyebolt	ASTM A193 Gr B7				
25	Gland Nut	ASTM A194 Gr 2H				
26	Gear Stud	ASTM A193 Gr B7				
27	Gear Nut	ASTM A194 Gr 2H				
28	Spring Spacer	Carbon Steel				
29	Packing Spacer	Stainless Steel				
30	Travel Indicator	Stainless Steel				
31	Adjusting Nut	ASTM A194 Gr 2H				
32	Anti-dust Ring	PTFE				

Component Parts Lists

Pressure Seal Bonnet

No.	Part Name
1	Body
2	Bonnet
3	Disc
4	Disc Carrier
5	Seat
6	Stem
7	Sealing Ring
8	Thrust Ring
9	Segment Ring
10	Bonnet Retainer
11	Gland
12	Gland Flange
13	Spacing Block
14	Adapter Plate
15	Stem Nut
16	Gear-box
17	Stem Protector
18	Yoke
19	Tube
20	Tube
21	Spring
22	Spring
23	By-pass Valve
24	Tube
25	Tube
26	Tube
27	Tee
28	Pin
29	Packing Ring
30	Yoke Nut

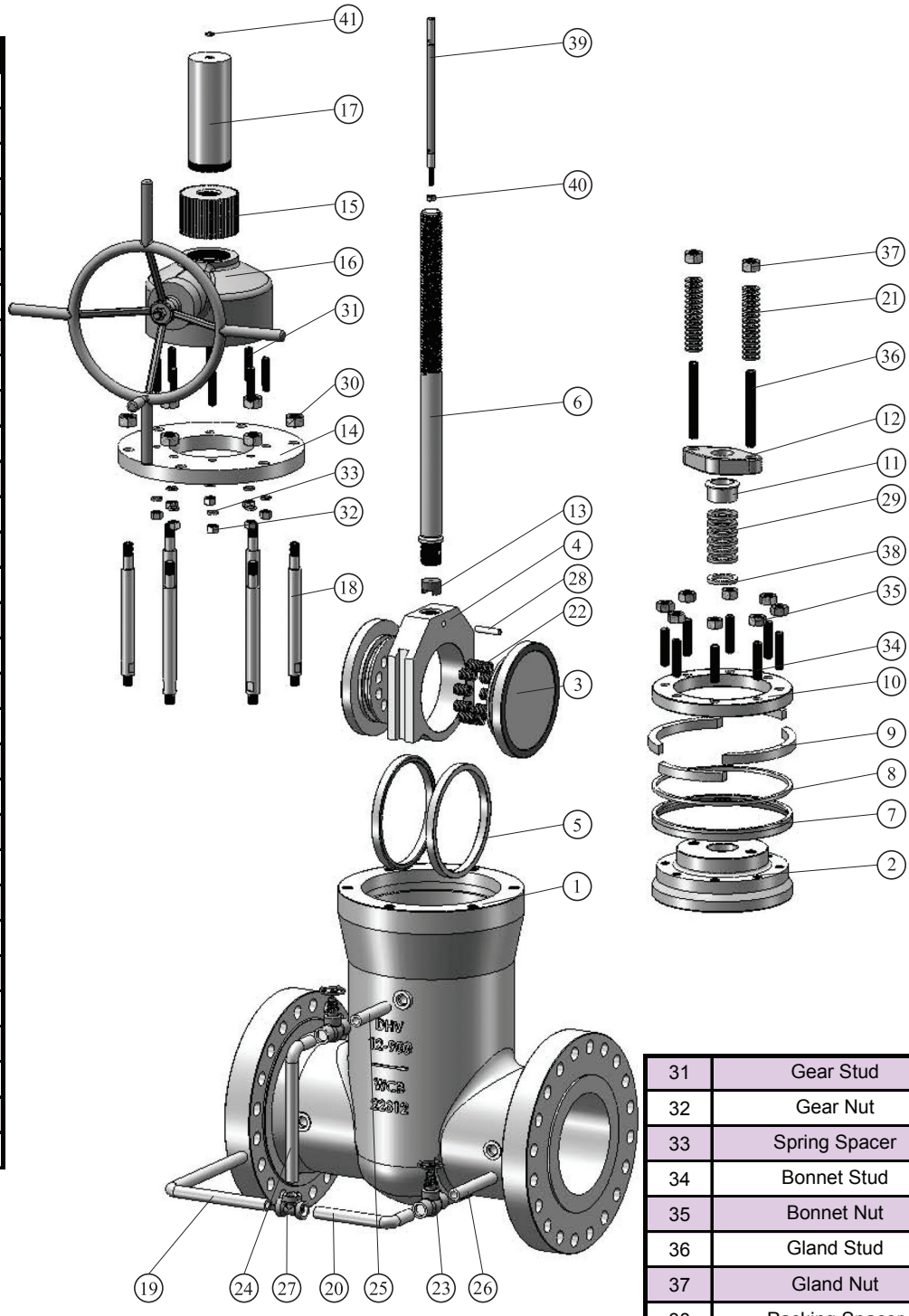

31	Gear Stud
32	Gear Nut
33	Spring Spacer
34	Bonnet Stud
35	Bonnet Nut
36	Gland Stud
37	Gland Nut
38	Packing Spacer
39	Travel Indicator
40	Adjusting Nut
41	Anti-dust Ring

Material Specification

Pressure Seal Bonnet

Material Specification						
No.	**Part Name**	**Carbon Steel**	**1.25% Cr**	**2.25% Cr**	**9Cr-1Mo-V**	**316SS**
1	Body	ASTM A216 Gr WCB/WCC 316SS overlay	ASTM A217 Gr WC6 316SS overlay	ASTM A217 Gr WC9 316SS overlay	ASTM A217 Gr C12A 316SS overlay	ASTM A351 Gr CF8M
2	Bonnet	ASTM A105N W/CO-CR overLay	ASTM A182 Gr F11 W/CO-CR overLay	ASTM A182 Gr F22 W/CO-CR overLay	ASTM A182 Gr F91 W/CO-CR overLay	ASTM A182 Gr F316 W/CO-CR overLay
3	Disc	ASTM A182 Gr F316--W/CO-CR overLay				
4	Disc Carrier	ASTM A182 Gr F316				
5	Seat	ASTM A182 Gr F316--W/CO-CR overLay				
6	Stem	ASTM A705 Gr 630				
7	Sealing Ring	Soft Stainless Steel--Silver Plated				
8	Thrust Ring	ASTM A182 Gr F316				
9	Segment Ring	Carbon Steel				
10	Bonnet Retainer	Carbon Steel				
11	Gland	ASTM A182 Gr F316				
12	Gland Flange	Carbon Steel				
13	Spacing Block	ASTM A182 Gr F316				
14	Adapter Plate	Carbon Steel				
15	Stem Nut	ASTM A439 Gr D-2C/ASTM B150 Alloy C61900				
16	Gear-box	Carbon Steel Body				
17	Stem Protection	Carbon Steel				
18	Yoke	ASTM A29 Gr 4130				
19	Tube	ASTM A672 Gr B70				
20	Tube	ASTM A672 Gr B70				
21	Spring	ASTM A564 UNS S17700				
22	Spring	ASTM B637 UNS N07500				
23	By-pass Valve	Carbon Steel				
24	Tube	ASTM A672 Gr B70				
25	Tube	ASTM A672 Gr B70				
26	Tube	ASTM A672 Gr B70				
27	Tee	Carbon Steel				
28	Pin	ASTM A182 Gr F316				
29	Packing Ring	Garlock1303 FEP				
30	Yoke Nut	ASTM A194 Gr 2H				
31	Gear Stud	ASTM A193 Gr B7				
32	Gear Nut	ASTM A194 Gr 2H				
33	Spring Spacer	Carbon Steel				
34	Bonnet Stud	ASTM A193 Gr B7				
35	Bonnet Nut	ASTM A194 Gr 2H				
36	Gland Stud	ASTM A193 Gr B7				
37	Gland Nut	ASTM A194 Gr 2H				
38	Packing Spacer	Stainless Steel				
39	Travel Indicator	Stainless Steel				
40	Adjusting Nut	ASTM A194 Gr 2H				
41	Anti-dust Ring	PTFE				

Dimensions And Weights

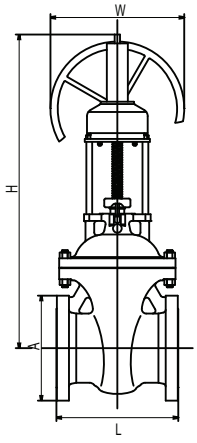

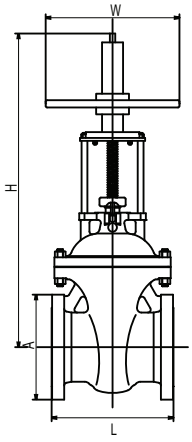

Class 150

Size		L(RF)		L(RTJ)		L		A		H		W(Gear)		W(Wheel)		Weight	
NPS	PN	mm	in	mm	in	mm	in	mm	in	mm	in	mm	in	mm	in	kg	lb
2"	50	178	7.01	191	7.52	216	8.50	152	5.98	510	20.08	-	-	260	10.24	33	73
3"	80	203	7.99	216	8.50	283	11.14	190	7.48	680	26.77	-	-	300	11.81	40	88
4"	100	229	9.02	241	9.49	305	12.01	229	9.02	835	32.87	800	31.50	-	-	70	154
6"	150	267	10.51	279	10.98	403	15.87	279	10.98	1165	45.87	800	31.50	-	-	129	284
8"	200	292	11.50	305	12.01	419	16.50	343	13.50	1300	51.18	800	31.50	-	-	195	430
10"	250	330	12.99	343	13.50	457	17.99	406	15.98	1560	61.42	800	31.50	-	-	275	606
12"	300	356	14.02	368	14.49	502	19.76	483	19.02	1820	71.65	800	31.50	-	-	370	816
14"	350	381	15.00	394	15.51	572	22.52	533	20.98	1925	75.79	800	31.50	-	-	508	1120
16"	400	406	15.98	419	16.50	610	24.02	597	23.50	2000	78.74	800	31.50	-	-	655	1444
18"	450	432	17.01	445	17.52	660	25.98	635	25.00	2315	91.14	800	31.50	-	-	840	1852
20"	500	457	17.99	470	18.50	711	27.99	698	27.48	2515	99.02	800	31.50	-	-	1065	2348
24"	600	508	20.00	521	20.51	813	32.01	813	32.01	3120	122.83	800	31.50	-	-	2000	4409

Class 300

Size		L(RF)		L(RTJ)		L		A		H		W(Gear)		W(Wheel)		Weight	
NPS	PN	mm	in	mm	in	mm	in	mm	in	mm	in	mm	in	mm	in	kg	lb
2"	50	216	8.50	232	9.13	216	8.50	165	6.50	510	20.08	-	-	320	12.60	39	86
3"	80	283	11.14	298	11.73	283	11.14	210	8.27	680	26.77	-	-	350	13.78	46	101
4"	100	305	12.01	321	12.64	305	12.01	254	10.00	835	32.87	800	31.50	-	-	83	183
6"	150	403	15.87	419	16.50	403	15.87	318	12.52	1165	45.87	800	31.50	-	-	170	375
8"	200	419	16.50	435	17.13	419	16.50	381	15.00	1300	51.18	800	31.50	-	-	245	540
10"	250	457	17.99	473	18.62	457	17.99	444	17.48	1560	61.42	800	31.50	-	-	411	906
12"	300	502	19.76	518	20.39	502	19.76	521	20.51	1820	71.65	800	31.50	-	-	610	1345
14"	350	762	30.00	778	30.63	762	30.00	584	22.99	1925	75.79	800	31.50	-	-	780	1720
16"	400	838	32.99	854	33.62	838	32.99	648	25.51	2000	78.74	800	31.50	-	-	1008	2222
18"	450	914	35.98	930	36.61	914	35.98	711	27.99	2315	91.14	800	31.50	-	-	1402	3091
20"	500	991	39.02	1010	39.76	991	39.02	775	30.51	2515	99.02	800	31.50	-	-	1545	3406
24"	600	1143	45.00	1165	45.87	1143	45.00	914	35.98	3120	122.83	800	31.50	-	-	2135	4707

Dimensions And Weights

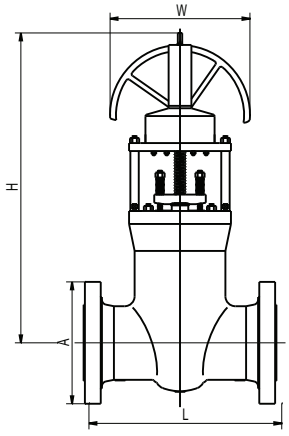

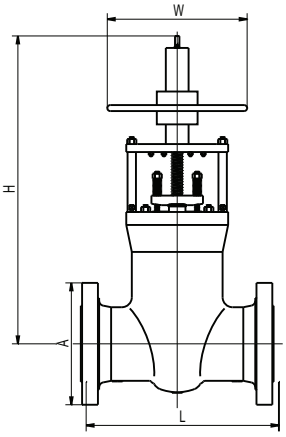

Class 600

Size		L(RF)		L(RTJ)		L		A		H		W(Gear)		W(Wheel)		Weight	
NPS	PN	mm	in	mm	in	mm	in	mm	in	mm	in	mm	in	mm	in	kg	lb
2"	50	292	11.50	295	11.61	292	11.50	165	6.50	470	18.50	-	-	350	13.78	27	60
3"	80	356	14.02	359	14.13	356	14.02	210	8.27	651	25.63	-	-	350	13.78	91	201
4"	100	432	17.01	435	17.13	432	17.01	273	10.75	710	27.95	800	31.50	-	-	113	249
6"	150	559	22.01	562	22.13	559	22.01	356	14.02	1105	43.50	800	31.50	-	-	363	800
8"	200	660	25.98	664	26.14	660	25.98	419	16.50	1227	48.31	800	31.50	-	-	590	1301
10"	250	787	30.98	791	31.14	787	30.98	508	20.00	1319	51.93	800	31.50	-	-	900	1984
12"	300	838	32.99	841	33.11	838	32.99	559	22.01	1741	68.54	800	31.50	-	-	1497	3300
14"	350	889	35.00	892	35.12	889	35.00	603	23.74	1741	68.54	800	31.50	-	-	1497	3300
16"	400	991	39.02	994	39.13	991	39.02	686	27.01	1885	74.21	800	31.50	-	-	1769	3900
18"	450	1092	42.99	1095	43.11	1092	42.99	743	29.25	2245	88.39	800	31.50	-	-	2268	5000
20"	500	1194	47.01	1200	47.24	1194	47.01	813	32.01	2470	97.24	800	31.50	-	-	3447	7599
24"	600	1397	55.00	1407	55.39	1397	55.00	940	37.01	2983	117.44	800	31.50	-	-	4536	10000

Class 900

Size		L(RF)		L(RTJ)		L		A		H		W(Gear)		W(Wheel)		Weight	
NPS	PN	mm	in	mm	in	mm	in	mm	in	mm	in	mm	in	mm	in	kg	lb
2"	50	368	14.49	371	14.61	368	14.49	216	8.50	470	18.50	800	31.5	-	-	27	60
3"	80	381	15.00	384	15.12	381	15.00	241	9.49	631	24.84	800	31.5	-	-	91	201
4"	100	457	17.99	460	18.11	457	17.99	292	11.50	710	27.95	800	31.50	-	-	113	249
6"	150	610	24.02	613	24.13	610	24.02	381	15.00	1105	43.50	800	31.50	-	-	363	800
8"	200	737	29.02	740	29.13	737	29.02	470	18.50	1227	48.31	800	31.50	-	-	590	1301
10"	250	838	32.99	841	33.11	838	32.99	546	21.50	1318	51.89	800	31.50	-	-	900	1984
12"	300	965	37.99	968	38.11	965	37.99	610	24.02	1741	68.54	800	31.50	-	-	1497	3300
14"	350	1029	40.51	1038	40.87	1029	40.51	641	25.24	1741	68.54	800	31.50	-	-	1497	3300
16"	400	1130	44.49	1140	44.88	1130	44.49	705	27.76	1995	78.54	800	31.50	-	-	1769	3900
18"	450	1219	47.99	1232	48.50	1219	47.99	787	30.98	2272	89.45	800	31.50	-	-	2268	5000
20"	500	1321	52.01	1334	52.52	1321	52.01	857	33.74	2470	97.24	800	31.50	-	-	3447	7599
24"	600	1549	60.98	1568	61.73	1549	60.98	1041	40.98	2983	117.44	800	31.50	-	-	4536	10000

Dimensions And Weights

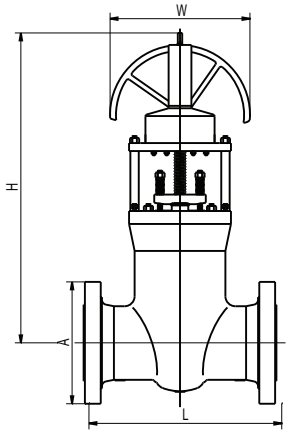

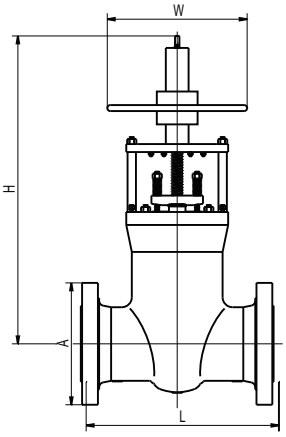

Class 1500

Size		L(RF)		L(RTJ)		L		A		H		W(Gear)		W(Wheel)		Weight	
NPS	PN	mm	in	mm	in	mm	in	mm	in	mm	in	mm	in	mm	in	kg	lb
2"	50	368	14.49	371	14.61	368	14.49	216	8.50	470	18.50	800	31.5	-	-	27	60
3"	80	470	18.50	473	18.62	470	18.50	267	10.51	651	25.63	800	31.5	-	-	91	201
4"	100	546	21.50	549	21.61	546	21.50	311	12.24	710	27.95	800	31.50	-	-	113	249
6"	150	705	27.76	711	27.99	705	27.76	394	15.51	1105	43.50	800	31.50	-	-	363	800
8"	200	832	32.76	841	33.11	832	32.76	483	19.02	1227	48.31	800	31.50	-	-	590	1301
10"	250	991	39.02	1000	39.37	991	39.02	584	22.99	1319	51.93	800	31.50	-	-	900	1984
12"	300	1130	44.49	1146	45.12	1130	44.49	673	26.50	1471	57.91	800	31.50	-	-	1497	3300
14"	350	1257	49.49	1276	50.24	1257	49.49	749	29.49	1471	57.91	800	31.50	-	-	1497	3300
16"	400	1384	54.49	1407	55.39	1384	54.49	826	32.52	1816	71.50	800	31.50	-	-	1769	3900
18"	450	1537	60.51	1559	61.38	1537	60.51	914	35.98	2272	89.45	800	31.50	-	-	2268	5000
20"	500	1664	65.51	1686	66.38	1664	65.51	984	38.74	2483	97.76	800	31.50	-	-	3447	7599
24"	600	1943	76.50	1972	77.64	1943	76.50	1168	45.98	2983	117.44	800	31.50	-	-	4536	10000

Class 2500

Size		L(RF)		L(RTJ)		L		A		H		W(Gear)		W(Wheel)		Weight	
NPS	PN	mm	in	mm	in	mm	in	mm	in	mm	in	mm	in	mm	in	kg	lb
2"	50	451	17.76	454	17.87	451	17.76	235	9.25	641	25.24	800	31.5	-	-	99	218
3"	80	578	22.76	584	22.99	578	22.76	305	12.01	687	27.05	800	31.5	-	-	102	225
4"	100	673	26.50	683	26.89	673	26.50	356	14.02	687	27.05	800	31.50	-	-	136	300
6"	150	914	35.98	927	36.50	914	35.98	483	19.02	1040	40.94	800	31.50	-	-	386	851
8"	200	1022	40.24	1038	40.87	1022	40.24	552	21.73	1254	49.37	800	31.50	-	-	680	1499
10"	250	1270	50.00	1292	50.87	1270	50.00	673	26.50	1317	51.85	800	31.50	-	-	909	2004
12"	300	1422	55.98	1445	56.89	1422	55.98	762	30.00	1594	62.76	800	31.50	-	-	1587	3499

Seeking a Great Name in Valve Technology

Please visit our DHV website: www.dhvindustries.com or www.dhvvalve.com for a copy of our API 6D monogram certificate. Customer and Project referrals are available upon request. For certified data and current specifications, please contact us or your local DHV agent. Information provided in this catalog is for general purposes only.

DHV reserves the right to discontinue the manufacture or change and modify our design and construction of any DHV product, in due course of our manufacturing procedure without incurring any obligation to accept for credit, to replace or furnish or install such changes or modifications on products previously or subsequently sold.

Your local DHV agent

DHV Industries, Inc.
3451 Pegasus Driver Bakersfield. CA 93308 U.S.A.
Call Toll Free: (877) DHV-USA1
Phone: (661) 392-8948 Fax: (661) 392-8947
E-mail: sales@dhvindustries.com
Website: www.dhvindustries.com
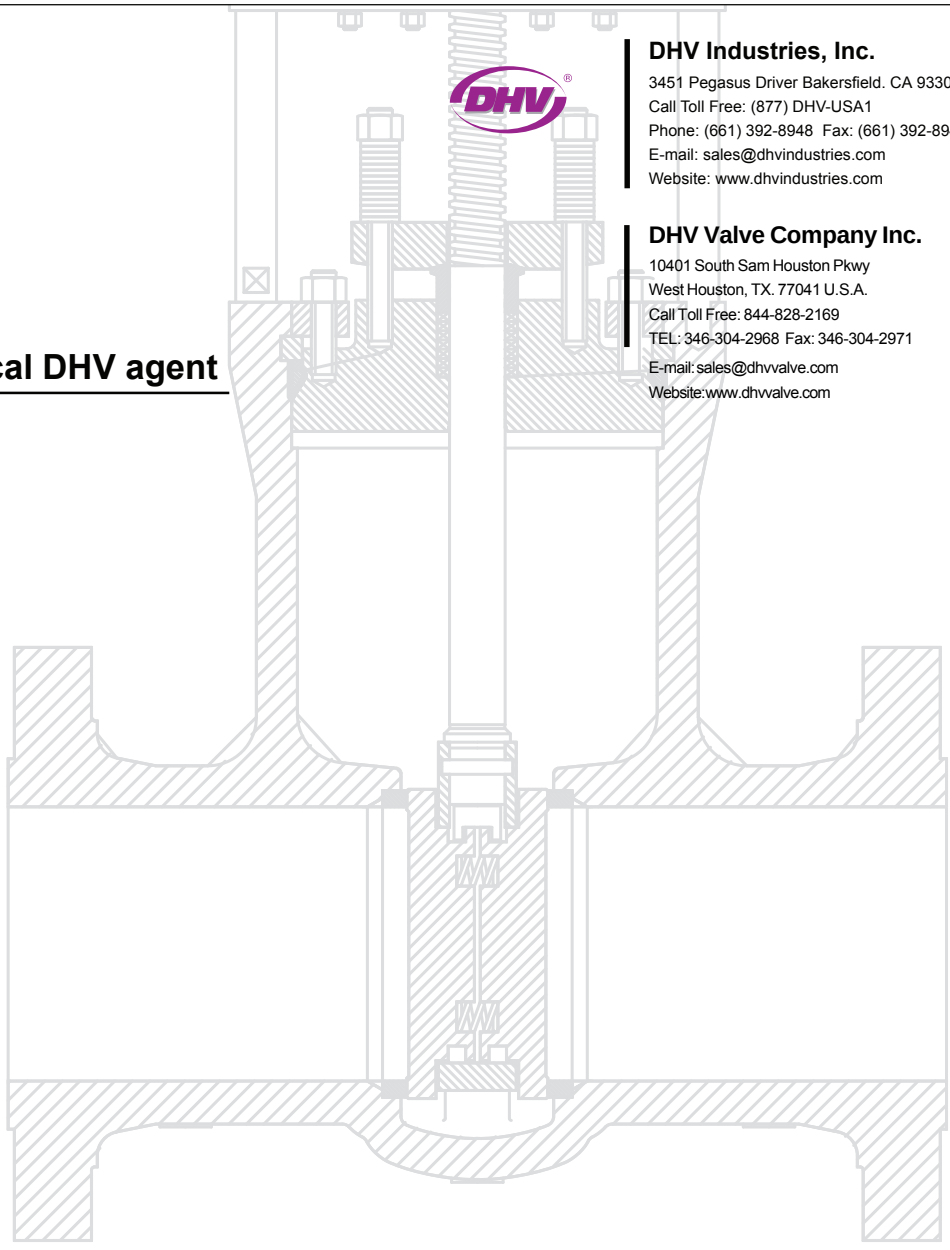
DHV Valve Company Inc.
10401 South Sam Houston Pkwy
West Houston, TX. 77041 U.S.A.
Call Toll Free: 844-828-2169
TEL: 346-304-2968 Fax: 346-304-2971
E-mail: sales@dhvvalve.com
Website: www.dhvvalve.com