INSTALLATION, OPERATION AND MAINTENANCE MANUAL

RISING STEM

BALL VALVE

TABLE OF CONTENTS

TYPICAL CONFIGURATION

VALVE DETAILS – RISING STEM BALL VALVE – SOFT SEAT

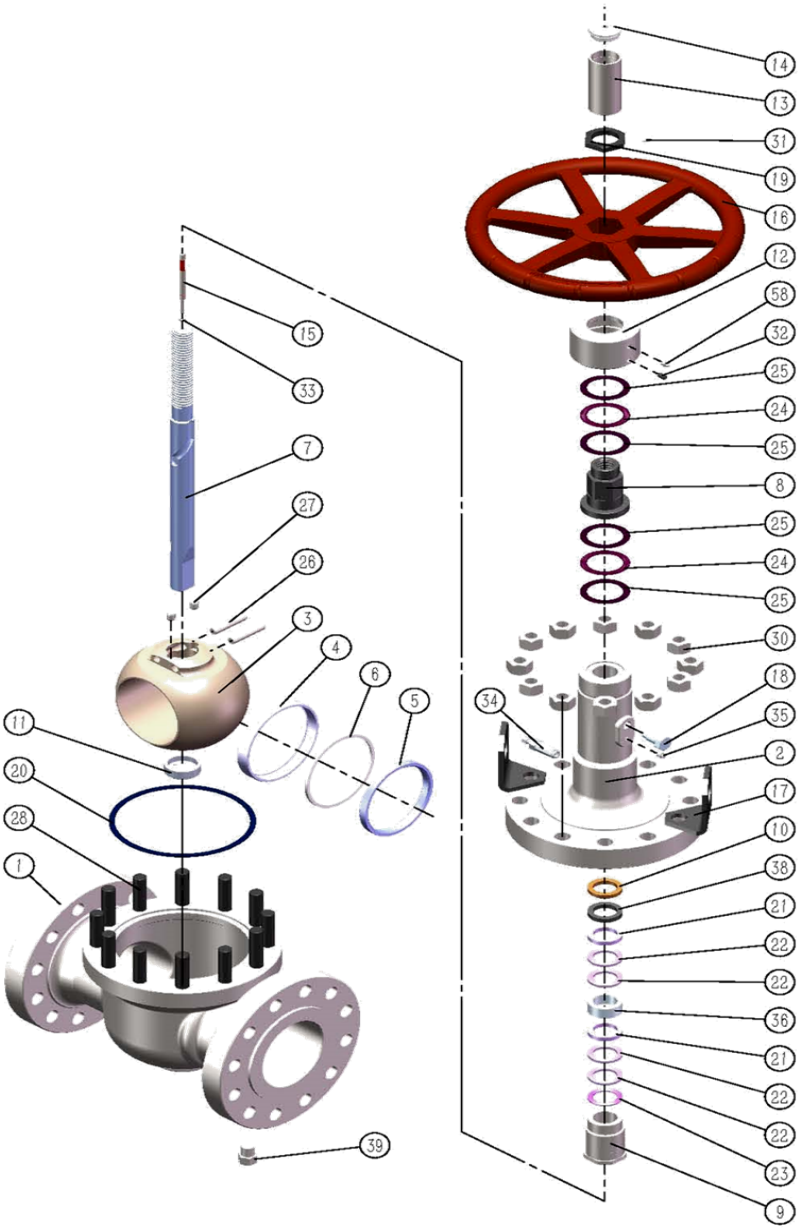

No.	Description
1	Body
2	Bonnet
3	Core
4	Outside Seat
5	Inside Seat
6	Seat Insert
7	Stem
8	Drive Nut
9	Bonnet Sleeve
10	Packing Ring
11	Trunnion Bushing
12	Gland
13	Stem Protector
14	Rod Seal
15	Indicator
16	Handwheel
17	Lifting Lug
18	Stem Guide
19	Hex Nut
20	Gasket
21	Packing
22	Packing
23	Packing
24	Bearing Washer
25	Thrust Washer
26	Core Pin
27	Support Pin
28	Bolt
29	Bolt
30	Nut
31	Screw
32	Screw
33	Nut
34	Stem Packing Injection
35	Lower Lube Fitting
36	Packing
38	Graphite
39	Drain Fitting
58	Lube Fitting

VALVE DETAILS – RISING STEM BALL VALVE – METAL SEAT

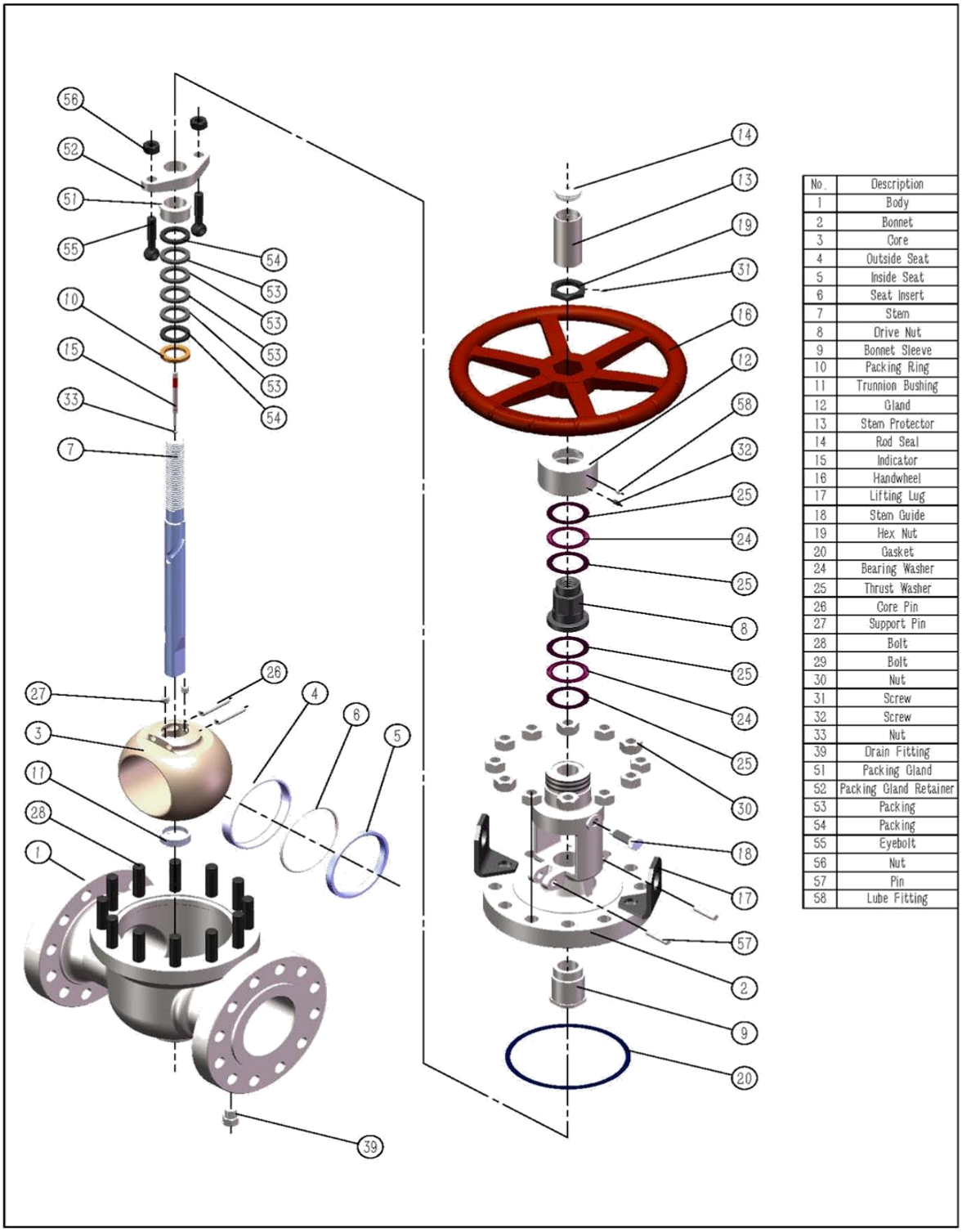

No.	Description
1	Body
2	Bonnet
3	Core
4	Outside Seat
5	Inside Seat
6	Seat Insert
7	Stem
8	Drive Nut
9	Bonnet Sleeve
10	Packing Ring
11	Trunnion Bushing
12	Gland
13	Stem Protector
14	Rod Seal
15	Indicator
16	Handwheel
17	Lifting Lug
18	Stem Guide
19	Hex Nut
20	Gasket
24	Bearing Washer
25	Thrust Washer
26	Core Pin
27	Support Pin
28	Bolt
29	Bolt
30	Nut
31	Screw
32	Screw
33	Nut
39	Drain Fitting
51	Packing Gland
52	Packing Gland Retainer
53	Packing
54	Packing
55	Eyebolt
56	Nut
57	Pin
58	Lube Fitting

VALVE DETAILS – RISING STEM BALL VALVE – METAL SEAT – PISTON ACTUATOR

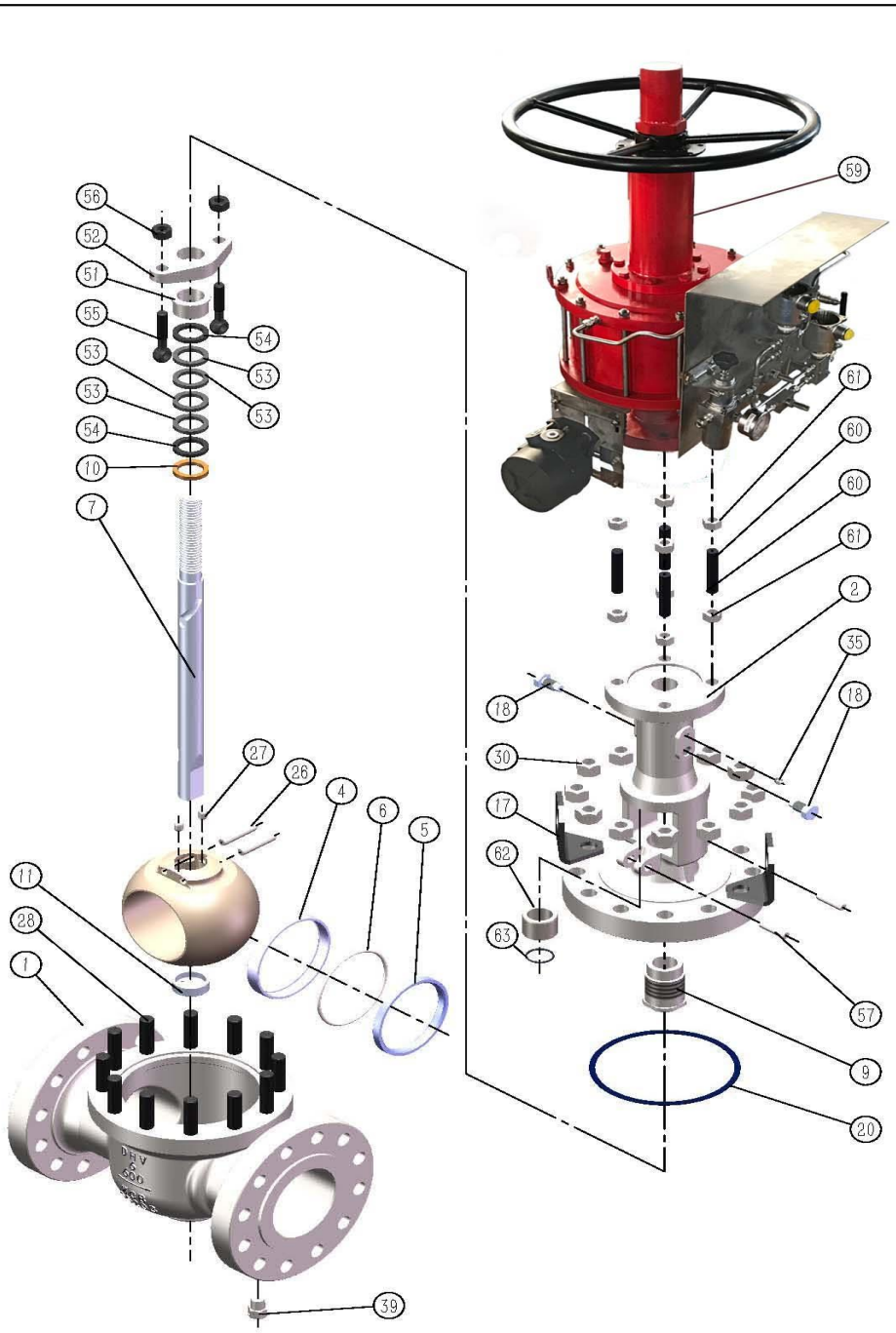

No.	Description
1	Body
2	Bonnet
3	Core
4	Outside Seat
5	Inside Seat
6	Seat Insert
7	Stem
9	Bonnet Sleeve
10	Packing Ring
11	Trunnion Bushing
17	Lifting Lug
18	Stem Guide
20	Gasket
26	Core Pin
27	Support Pin
28	Bolt
29	Bolt
30	Nut
35	Lube Fitting
39	Drain Fitting
51	Packing Gland
52	Packing Gland Retainer
53	Packing
54	Packing
55	Eyebolt
56	Nut
57	Pin
59	Piston Actuator
60	Stud
61	Nut
62	Stem Bushing
63	O-Ring

FOREWORD

Personal safety and Long Term Ownership of your DHV Rising Stem Ball Valve is the most important matter in reviewing our Installation, Operation & Maintenance Manual. This manual will provide all the necessary safety guidelines for our valve including information for the valve transportation, storage, installation, operation and maintenance. Please read carefully before installing or servicing the valve.

DHV provides general guidelines in this manual, and cannot provide specific data and warnings for all possible applications. The purchaser/end user must therefore assume responsibility for proper valve selection, sizing, installation, operation, and maintenance of DHV valve products. The purchaser/end user should read and understand this document and any instructions provided with the product, and conduct training with its employees and contractors to ensure they are aware of the proper and safe use of DHV valve products in connection with the specific application.

1. ENDUSER INSTRUCTION

Personnel safety is always the most important factor in the transportation, storage, installation, operation and maintenance of any valve. DHV valves are designed to meet the customer's order requirements and specifications. DHV disclaims all responsibility for problems that may be caused by applications other than the specified use. Valve service pressure/temperature information is detailed on the valve name plate. When selecting a valve, always consider the application, service and temperature for the intended service. Select the applicable valve material for anti-corrosion and anti-abrasive service. For safety of personnel and plant/environment: Prior to conducting any service to the valve, ensure the valve is not under pressure, properly vented, and drained before servicing. For all electric, hydraulic or pneumatic actuated valves, all power connections to the valve/actuator must be turned off before performing any maintenance and service. When performing any operation, maintenance or service, personal protective equipment should be used, such as protective clothing, oxygen masks, safety glasses, work gloves, etc. DHV will not be responsible for any loss or expense resulting from the failure of equipment, damage to any property, or death or injury to any person resulting in whole or in part from repairs or modification performed by other than authorized DHV personnel. Such unauthorized repairs shall also serve to terminate any contractual or other warranty, if any, on the equipment and may result in equipment no longer meeting applicable requirements.

2. VALVE TRANSPORTATION AND STORAGE

2.1 TRANSPORTATION

1. Valves should remain in the closed position during shipping and handling. Each valve should be securely packaged either on a pallet or in a crate to avoid any damage during shipping.
2. Use the proper hoisting equipment to transport the valve, especially during lifting or lowering the valve. Special attention to personnel safety and the care of the valve should be made when transporting the valve. Avoid impacting or striking the valve during transportation. Lay the valve on a clean flat surface; make sure to avoid laying the valve on the flange face. Ensure there is adequate clearance around the valve for proper operation and maintenance.
3. During transportation, ensure the valve paint, name plate and flange sealing surfaces are fully protected. Do not drag the valve on the floor, nor put the valve flange sealing face on the floor.
4. For those valves not required to be immediately installed, do not open the end flange protective covers. Ensure the valves are stored in a safe clean environment and are protected from rain and dust.

2.2 STORAGE

1. Valves should be stored in the closed position. Valve ports and flange serration surfaces should be kept sealed with protective flange covers.
2. Valves should be stored in a dust free, low humidity and well ventilated room, not in direct contact to the floor. If possible, the valves shall be kept in the original packing box. If valves have to be stored outdoors, keep the valve in the original crate or shipping container. Ensure the valve packaging is stored on raised blocking to avoid moisture damage. Protective covering should be used for protection against dust and rain.
3. Valves should never be stacked on top of each other, to avoid any valve distortion which may affect valve performance and cause personnel injury.
4. Valves that have been stored for an extended period of time should be cleaned and inspected prior to installation. Inspect the sealing surface to ensure it is clean and free of any debris or damage.
5. Do not expose the valve to any corrosive environment as this may cause damage to the valve components.

3. VALVE INSTALLATION

- Review all documentation to fully understand the valve and related information that will provide safe installation and a long service life for your valve.
- Valve information can be found on the valve body, and the name plate. Fig 1 is a typical nameplate. Reference the information on our nameplate for ordering replacement parts, or when making inquiries about your valve's operation or maintenance needs.
- Valve ends should have a protective cover to protect the valve port from any foreign particles and dust which will damage the ball and seat sealing surfaces.

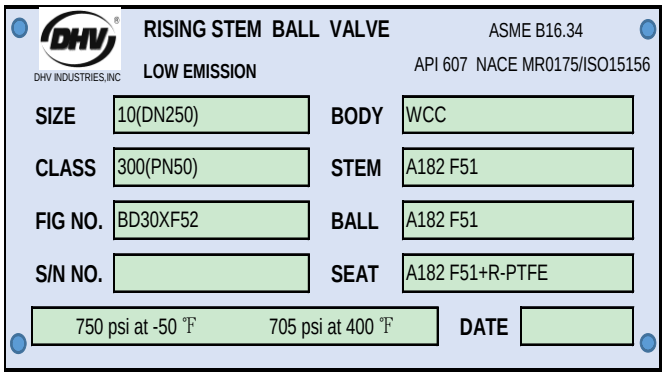

SIZE	Nominal valve size
CLASS	API class designation
FIG NO.	See the DHV Catalog
S/N NO.	Serial number
BODY	Body material designation
STEM	Stem material designation
BALL	Ball material designation
SEAT	Seat material designation
psi at ℉	Operating pressure
DATE	Valve manufacturing date

Figure 1 Typical Valve Nameplate Information

3.1 INSPECTION BEFORE INSTALLATION

3.1.1 Before installation, check the valve nameplate and valve body information to ensure the valve is suitable for the intended service.

3.1.2 Before installation, remove the flange cover and the protective film on the flange sealing face, inspect the ports and the flange sealing surface, remove any dirt with a clean soft cloth, use an anti-corrosive cleaning liquid to clean if necessary, and never use any other chemical products.

3.1.3 Inspect the flange gasket (including ring gasket) sealing surface and ensure it is in acceptable condition for installation.

3.1.4 After cleaning the valve and before installation, open and close the valve one time. Ensure the valve cycles smoothly. If abnormal operation is experienced, stop the operation and inspect the valve internals for any obstructions that may be preventing normal operation.

3.1.5 After successfully cycling and assuring the proper operation of the valve, return the valve to the open position and ensure the valve sealing surfaces are protected until installation is complete.

3.2 INSTALLATION

Position the valve into the pipe or the flange connection; ensure that any stresses caused by improper pipe alignment are relieved. Valves are not intended to be a means of aligning improperly fitted pipe.

3.2.1 MANUAL VALVES

- Install the valve using qualified piping standards and practices. Valves marked with flow direction must be installed in line with the piping flow.
- The recommended orientation for rising stem ball valves is upright with the valve in a horizontal line. The valve may be installed in other orientations; however, any deviation from recommended horizontal position may compromise proper valve operation and void the warranty.

3.2.2 ACTUATED VALVES

- All DHV pneumatic actuated valves are equipped with lifting lugs on the valve, use these lifting lugs to lift the valve to avoid any damage to the valve or injury to the operator. Never use the lifting lugs on the actuator to lift the entire valve assembly.
- During installation, follow the valve body flow arrow direction, connecting the valve upstream side to the pipeline high pressure side.
- Correct valve installation is very important, if valve is installed backwards, the valve parts may not be able to hold the pressure as original designed. If possible, install the actuated valve vertically.
- If actuated valve is installed in other than vertical position, according to the arrangement of the valve/actuator, additional support for the actuator may be required.

- Once the pneumatic actuator position limiting screw has been set, the end user can not adjust the screw by themselves, otherwise equipment damage, personnel safety or financial loss may occur, end user shall take full responsibility.

- After valve and actuator have been installed on the pipe line, connecting the power and pressure source to the actuator.

- **WARNING:** Pneumatic actuator air/gas pressure shall be adjusted to the value listed on the name plate; otherwise this may damage the actuator.

- Cycle the valve to full close and full open position to verify the valve operation is normal. Check the valve position indicator has indicated correct valve position, check the valve control system is correctly installed and calibrated.

FLANGE ENDS:

- Select the proper gasket (including ring gasket) to install, line up the bolt holes between the valve flange and pipeline flange, then install the bolts and nuts and tighten to the accepted piping and bolting standards. The bolt threads should be lubricated first for ease of bolting.
- Use an appropriate sized torque wrench when tightening the bolt/nut, to avoid flange deformation. Please follow Fig 2 and Table 1 for bolting sequence and bolting torque. If the bolting quantity is different from the chart shown, please follow the same principle to get a new sequence to follow.
- For large diameter valves, the valve must be properly and safely supported during installation. After installation is completed, valve supports should be moved to the bottom of the valve flanges.
- After valve installation is complete, recheck and tighten the bolts including the gland bolts as necessary to the values provided in Table 1 & Figure 2.
- It is recommended that the tightness of the joint bolt tension and gland bolts be inspected at least yearly. Refer to Table 1 & Figure 2.

DURING INSTALLATION, IF VALVE IS NOT IN LINE WITH THE PIPELINE, FLANGE FACES ARE NOT PARALLEL TO EACH OTHER, OR BOLTING TORQUEIS NOT UNIFORM, VALVE LEAKAGE MAY BE EXPERIENCED.

Table 1 Bolting Tightening Torque Chart

Stud Size (Inch)	Measurement: Newton-meters N·m Tolerance: +/- 10% (Conversion: 1 ft·lb= 1.36 N·m 1 N·m = .74 ft·lb)						
	B7M/L7M	B7/L7	B8 (I)/ B8M(I)	B8M (II)	B8 (II)	B8MLCuN	B16
5/16-18UNC	21	27	8	25	26	9	28
3/8-16UNC	36	47	13	43	45	16	48
1/2-13UNC	85	111	32	101	107	37	112
9/16-12UNC	121	158	45	144	152	53	160
5/8-11UNC	165	217	62	197	208	72	218
3/4-10UNC	289	378	108	344	362	126	380
7/8-9UNC	459	601	171	459	-	200	605
1-8UNC	683	894	255	683	-	298	901
1-1/8-8UN	992	1298	370	811	-	433	1308
1-1/4-8UN	1381	1807	515	1130	-	602	1820
1-3/8-8UN	1860	2435	693	1167	-	812	2452
1-1/2-8UN	2438	3192	909	1530	-	1064	3214
1-5/8-8UN	3126	4092	1165	-	-	1364	4120
1-3/4-8UN	3931	5146	1465	-	-	1715	5182
1-7/8-8UN	4863	6367	1813	-	-	2122	6411
2-8UN	5933	7767	2211	-	-	2589	7820
2-1/4-8UN	8519	11152	3175	-	-	3717	11229
2-1/2-8UN	11764	15400	4385	-	-	5133	15507
2-3/4-8UN	15742	18747	5867	-	-	6869	18747
3-8UN	20528	24447	7651	-	-	8958	24447

Table 1 Bolting Tightening Torque Chart (cont.)

Stud Size (Metric)	Measurement: Newton-meters N·m Tolerance: +/- 10% (Conversion: 1 ft·lb= 1.36 N·m 1 N·m = .74 ft·lb)						
	B7M/L7M	B7/L7	B8 (I)/ B8M(I)	B8M (II)	B8 (II)	B8MLCuN	B16
M10	43	56	16	51	54	19	56
M12	73	96	27	87	92	32	96
M16	175	230	66	209	221	77	232
M20	338	443	126	338	424	148	446
M24	578	757	215	578	-	252	762
M30	1134	1484	422	928	-	495	1495
M36	1964	2572	732	1232	-	857	2589
M42	3125	4091	1165	1960	-	1364	4119

Figure 2 Bolt Tightening Sequence

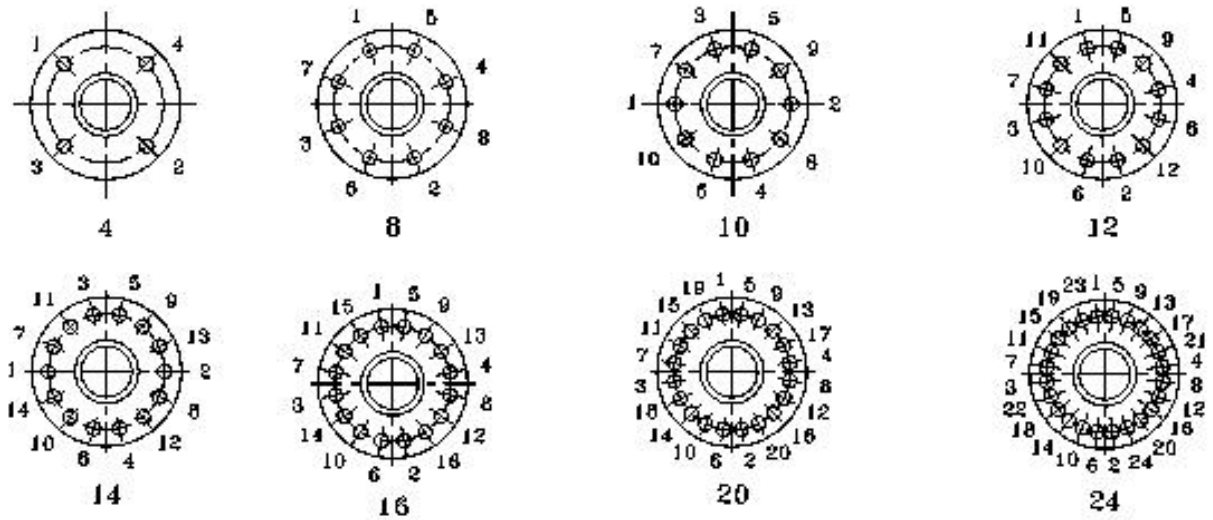

WELD ENDS:

- Weld ends must be kept clean with no burrs, oil, dirt or foreign objects.
- The valve end and pipe end must be in proper alignment for effective welding.
- Follow the approved WPS to perform the welding. Ensure that the temperature of the body/seats area does not exceed 200°F, verify this temperature with a Tempil stick; welding too close to the seat/sealing area will cause area distortion. Protect the valve port area to prevent welding slag and foreign matter from entering the valve.
- After welding, use approved and proper Non-Destructive Testing (NDT) method to check the welds; clean the welds thoroughly, and then perform local heat treatment if required.
- When installation is complete, prior to system testing and start-up, clean the valve by flushing the line of debris and other materials that may have accumulated inside the valve and in the valve seating area and surfaces during construction. When flushing the valve, open the valve fully, flush for a determined time based on line size. Close the valve to allow the fluid to fill the line; operate the valve to the half open and half closed position repeatedly, this action allows the fluid to build up within the valve assisting in flushing heavier debris from the valve. Fully close the valve, if seat leakage is noted after flushing, repeat flushing procedure. If leakage from the seat is still evident, the seating surface maybe damaged and need repair. If the valve is equipped with seat injection, the seats should be charged with a valve lubricant to displace any residual fluids or moisture in the seal areas of the valve.

DURING WELDING, THE TEMPERATURE NEAR THE VALVE SEAT INSERT AND ANY O-RING AREAS SHOULD NEVER EXCEED 94°C/200°F. A TEMPERATURE INDICATING DEVICE SHOULD BE USED TO MONITOR THE TEMPERATURE DURING THE WELDING. THIS ALSO APPLIES TO POST WELD HEAT TREATMENT.

4. VALVE OPERATION

- To assure maximum valve performance, only use a valve that is suitable for the rated pressure/temperature and corrosive environment.
- For your safety and normal operation, please read the following valve operation procedures:

4.1 The valve must be kept either in the fully open or fully closed position. Never throttle or leave the valve at the half-open position as erosion of the ball and seating surface may occur and damage will result.

4.2 Valve open and closed positions are indicated on the valve stem travel indicator. Rotating the valve hand wheel clockwise will close the valve; counter-clockwise operation will open the valve, this is also applicable to gear or motor actuated operation.

4.3 Install the pneumatic actuated valve, according to the instrument air/gas pressure rating listed on

the name plate, regulate the instrument pneumatic line to move the valve stem, watch the travel indicator on the actuator, when pointer to CLOSE position and cannot move further, this indicates valve is at closed position, when pointer to OPEN position and cannot move further, this is at full open position.

4.4 Don't use oversized torque to operate the valve when valve is jammed, because this may damage the actuator parts to make the valve not operable. Handwheel operated valves are in the open position when the stem travel indicator reads open. Conversely when the valve stem travel indicator reads closed the valve is fully closed. Gear operated valves will have a position indicator on the gear.

4.5 Never operate the valve without authorization and a full understanding of the safe operation procedures, inspections and proper handling instructions.

4.6 Before operating the valve in the piping system, ensure you have the related operation instructions, never operate-the valve without authorization.

4.7 Do not remove the valve stem guiding pins on the yoke when valve is under pressure.

4.8 Do not open the drain valve at the bottom of the valve body unless it is to check the seat leakage, when the valve drain is open, make sure the valve body is not under any pressure.

4.9 Rising stem ball valve operation are as follows:

4.10 Opening process:

1. At close position, valve core is tightly pressed against the valve seat through stem mechanical force.
2. When the stem is turned counter-clockwise through either the hand wheel or actuator, the stem will move upward, this will cause the valve core to move away from the valve seat.
3. Valve stem continues to rise, due to the curved shape at end of the stem, this will make the valve core rotate without any friction.
4. At full open position, valve stem has reached its highest location; valve core is at full open position.

4.11 Closing process:

1. When closing, turn the hand wheel or the pneumatic actuator clockwise to make the stem move downward.
2. Through the curved slot in the side of the stem, the guiding pins will force the stem downward and rotating at the same time, valve core is also rotating with the stem rotation.
3. When near the closing position, the core/stem has rotated 90 degrees.
4. Stem continues to go downward, through the stem end curved shape, this will force the valve core to mechanically press against the valve seat.

4.12 Pneumatic actuator operation is as follows:

4.13 Equipped with hydraulic damping oil tank, hand wheel plus hand pump to re-position the pneumatic actuator operation, see following steps and figures:

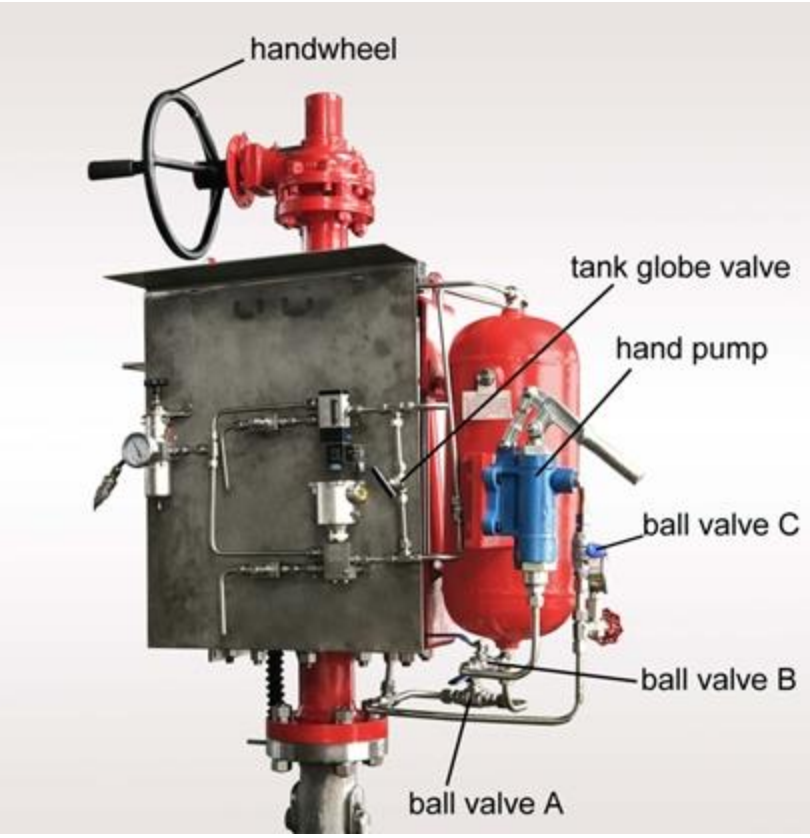

4.14 During normal pneumatic operation, counter-clockwise (according to open mark on the hand wheel) rotate the hand wheel to full open position (until the hand wheel is not able to turn), close the air/gas tank globe valve, then lock the hand wheel.

4.15 Need to close the valve if there is a loss of the instrument air/gas, first open the tank globe valve, then unlock the hand wheel, clockwise (follow arrow close mark on the hand wheel) to close the valve (until the hand wheel is not able to turn) to full close position. When instrument air pressure back to normal. Follow the above step 1 to normal automatic operation mode and close the air/gas tank globe valve.

4.16 Need to open the valve if there is a loss of the instrument air/gas, first open the air/gas tank globe valve, and then close-the ball valve A underneath the tank, open ball valve B and ball valve C, then operate the hand pump to pressurize the air tank (inlet pressure at the bottom of the tank, the maximum hydraulic pressure is 1 MPa (145 psi), until valve is fully open. When the instrument air/gas is back to normal, then close the globe valve, also close ball valves B and C, but open ball valve A.

4.17 Equipped with hand wheel re-positioned pneumatic actuator operation:

4.18 Change to manual operation when loss of instrument air pressure: During normal pneumatic actuation process, the valve position will remain at the last position between the full close and full open when the valve control lost either the instrument air or electric power, in order to manually operate the valve to the process required position, this hand wheel can operate the valve to either open or close position, follow the marking on the hand wheel, clockwise rotation to close the valve, and counter-

clockwise to open the valve. At beginning of the hand wheel operation, there is a short rotation without any engagement (stem is not moving, stem nut is turning and going upward or downward), until the stem nut is touching the upper shaft step or lower thrust bearing, the stem nut can only rotate and no vertical movement, this will drive the stem going either upward or downward to the desired position.

4.19 After the instrument air pressure gauge is back to normal, change back to automatic operation status:
4.20 Manual operation (rotate the hand wheel clockwise) to move the valve to the closed position, stem is touching the upper shaft step, then counter-clockwise rotate the hand wheel, the stem nut will turn until it contacts the lower thrust bearing surface (resistance force will increase rapidly), then turn the hand wheel clockwise 4 turns or gear box hand wheel (4 x gear box ratio) turns to form the stem coasting amount during automatic operation. The hand wheel locking hole should be in line with the locking hole on the bracket, put the lock through the hand wheel, the valve is back to automatic control operation.
4.21 Manually operate (turn the wheel counter-clockwise) the valve will rotate to the open position, the stem nut is touch the lower thrust bearing surface, then turn the hand wheel clockwise until the stem nut contacts the upper shaft step (resistance force will increase immediately), at this time, turn the hand wheel counter-clockwise 2 turns or gear box hand wheel (2 x gear ratio) turns to form the stem coasting amount during automatic operation. The hand wheel locking hole should in line the locking hole on the bracket, put the lock through the hand wheel, the valve is back to automatic control operation.

5. VALVE MAINTENANCE

Valves should be inspected regularly during operation and any findings should receive immediate attention in order to avoid any further damage to the valve or the system. Regular inspection and maintenance should be scheduled at a minimum of twice per year, or more often if required.

5.1 In less corrosive environments, it is suggested to check the valve body thickness every six months. In more corrosive environments, it should be checked every three months. If the measured wall thickness is less than specified in ASME B16.34, the valve should be replaced immediately.

5.2 Lubrication

5.2.1 Rising stem ball valve lubrication is not for valve sealing purposes, it is to reduce the friction and wear between the moving parts.

5.2.2 Lubrication schedule and selection

Valve lubrication shall be based on end user's experience; the following are the minimum lubrication requirements which are not included in normal operation experience and other applicable standards.

a) Minimum once a year.
b) Lubrication when stem shows leakage.
c) If valve is operated more than once a day, suggest to lubricate once every 3 months.
d) If valve is operated more than 10 times a day, suggest lubricating every 1000 cycles.
e) If valve is under corrosive or other special occasion also operated more than 10 times a day, suggest lubrication every 500 cycles.

5.2.3 For Rising stem ball valve, we recommend to use a high quality lithium based lubricant, for service temperature lower than -20℉（-29℃）, we recommend to use low temperature lubricant, For automatic valves with a gas-liquid linkage system, we recommend the use of Mobil ATF220

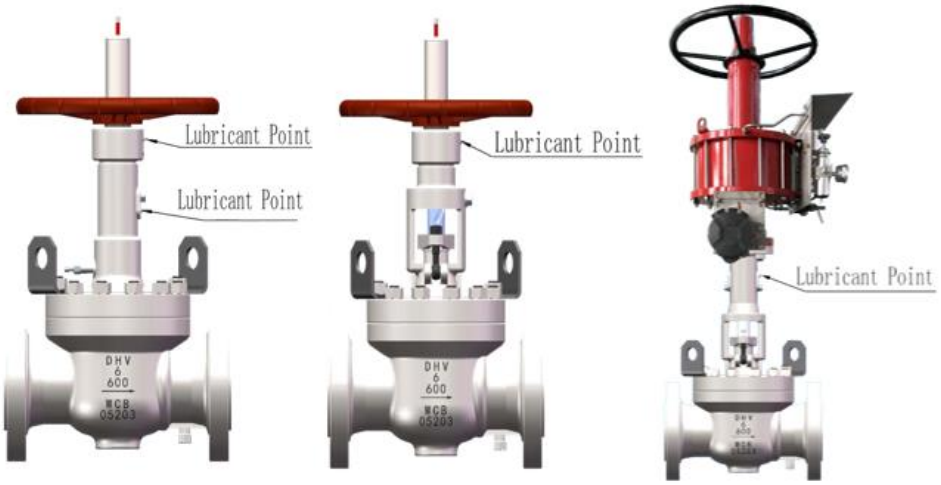

hydraulic transmission fluid or equivalent.

5.2.4 Lubrication points are showing on the following pictures:

5.2.5 All DHV Rising stem ball valve lubrication joints are equipped with a zerk fitting, this fitting is at top of the stem and bearing, do not remove under pressure. Pump the grease gun 2 to 10 times to provide sufficient lubrication.

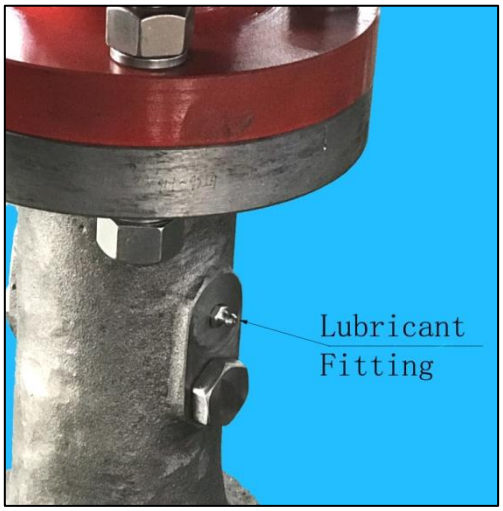

⚠ **WARNING:** do not remove the injection fitting from the valve, otherwise it may cause an accident or personnel injury.

5.2.6 When inspecting the oil level of the pneumatic actuator tank, ensure the valve is closed so that the oil is returned from the actuator to the tank, and the screw plug at the oil level sight is unscrewed. When the valve is closed, the tank is closed. The oil level should be at the oil level sight.

⚠ **WARNING:** If the valve is in the open position and the valve is under pressure, removal of the screw plug at the oil level sight port may cause an accident or personal injury.

5.3 Valve stem packing adjustment

5.3.1 All Rising stem ball valve soft seat (not including metal seat design), has the injectable type of packing design, this can effectively stop the stem packing leakage.

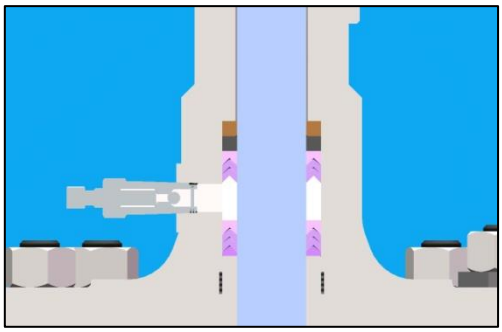

5.3.2 After injecting the packing material to the packing box compartment, this will increase the pressure inside the packing box, to spread the V-ring lips to seal the leakage, generally turn the packing screw 5-10 turns to stop the stem leakage.

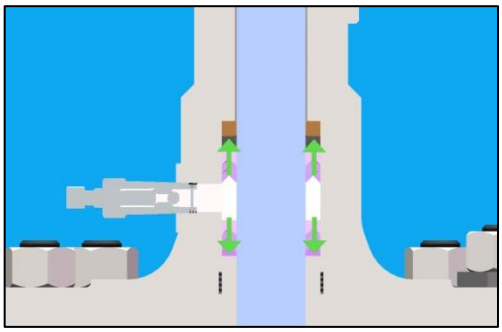

5.3.3 If injected packing is empty, the packing screw can be removed to add-new injectable packing. (be careful, make sure the ball check valve underneath has no leakage)

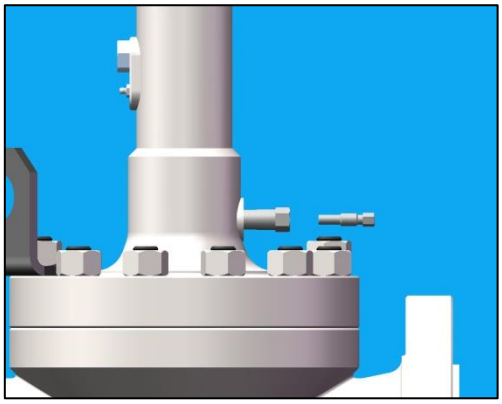

5.3.4 DHV high temperature Rising stem ball valve design is using an adjustable gland packing type design, it consists of the packing ring, packing gland, packing flange and eyebolt/nuts.

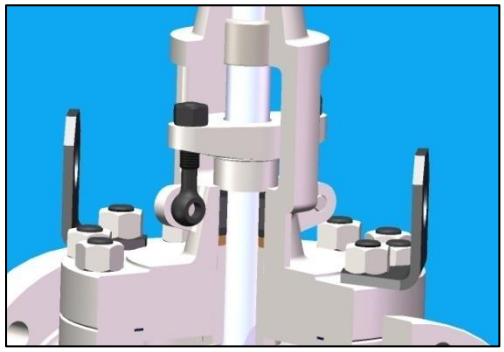

5.3.5 Using the packing flange compress the packing ring, with the adjustable eyebolt/nut can achieve an effectively sealing effect.

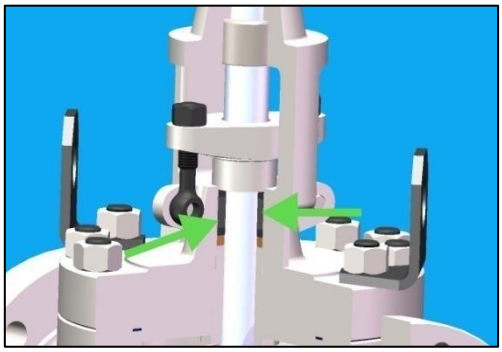

5.3.6 If stem leakage occurs, tighten the hex nut on the eyebolt to increase the stem packing force, if packing force too high, it will make the stem moving more difficult.

5.3.7 Do not remove the nut from the eyebolt when the valve is under pressure, this may cause personnel injury incident.

⚠ **WARNING: ANY MAINTENANCE OR REPAIR MUST NOT OCCUR UNTIL THE VALVE BODY PRESSURE IS COMPLETELY RELEASED. NO REPAIR WORK WILL BE DONE WHILETHE VALVE IS UNDER PRESSURE.**

6. DETAILED DISASSEMBLY AND ASSEMBLY

6.1 VALVE DISASSEMBLY

Rising stem ball valve can be disassembled in the pipeline or removed from pipeline. Before any disassembly or removing the valve, the pressure should be isolated from the pipeline first. Valve shall be kept at half-open position, valve internal pressure should be released through the drain valve until 0 psi. For a safety precaution, the following process shall be followed when disassemble the valve:

6.1.1 Keep the valve in open condition.

6.1.2 For hand wheel operated Rising stem ball valve, remove the hand wheel and all the parts above, then remove the stem nut and gland flange, for pneumatic operated Rising stem ball valve, remove all bolts/nuts between mounting flanges, use overhead crane to remove the pneumatic actuator by rotating clockwise to separate from the valve.

6.1.3 Remove all body/bonnet bolts/nuts diagonally, use crane to remove the whole bonnet assembly out or if necessary, the bonnet assembly can be disassembled first, such as valve stem, stem packing and packing rings etc.

6.1.4 Remove the core (ball) from the body, shaft bearing etc.

6.2 VALVE ASSEMBLY

6.2.1 Clean all valve parts, if necessary, replace all worn parts.

6.2.2 Valve core and shaft bearing assembly: Install the shaft bearing to the valve body, install the valve core (close position) to the valve body, check the seal area between the valve core and valve seat is matching.

6.2.3 Assembly between bonnet and stem: Install the stem through the bonnet, matching the guide pins to the guiding slot on the stem. For soft seat stem packing installation, first put the injectable type packing inside the bonnet, and then use the injection packing gun to add more packing to increase the packing pressure. For metal seated valve stem packing installation, first install the packing ring, the compressed packing (refer to 6.2.7). Install other parts to the bonnet, finish the bonnet assembly.

6.2.4 Assembly between valve body and bonnet assembly: Install the bolts to the body, install the bonnet assembly into the valve body, matching the stem shaft to the valve core, install the lifting lug, and tighten all the body/bonnet nuts.

6.2.5 Installation of the hand wheel operating mechanism: Attach the parts such as the stem valve stem nut indicator rod to the valve stem, screw the cap onto the valve cover and tighten the

stem nut.

6.2.6 Pneumatic actuator installation: measure the actual stroke of the pneumatic head and valve, then drive the to the fully open position, then drive the actuator to the fully closed position, ensure the actuator is hoisted to the concentric position with the valve stem; when rotating the actuator counterclockwise lower and mount to the flange of the valve fitting

6.2.7 Packing install sequence

If stem packing needs to be replaced, please follow the below procedures:

1. Release all valve internal pressure, loosen the nuts on the eyebolts, remove eyebolts and packing flange, packing gland (see figure 4).
2. Remove all old packing from the packing box, clean the packing box.
3. Use the new graphite packing ring around a round bar (its diameter is similar to stem diameter), then use knife to cut the packing ring (see figure 5).
4. Install the packing ring to the packing box, follow the below requirement:
   a. The first ring to the packing box, use packing gland sleeve to compress the packing to a correct position.
   b. Follow the same method to install the second ring, the cut location shall be 180° apart, after installing the second ring, use the packing gland to compress the packing ring, the compression percentage is between 20% - 25 %.
   c. Each packing ring's cutting location arrangement is according to Figure 6, use the same method to install the rest of the packing rings, one ring at a time, and make sure each ring is installed correctly before installing the next one, keep packing ring clean during installation, and not mix any foreign materials.
   d. After finishing the 5th packing ring (the 4th ring for 150LB and 300LB), it must use the packing gland flange to further compress the packing to allow the room for the 6th packing ring(5th packing ring for 150LB and 300LB).
   e. After the 6th packing ring (5th packing ring for 150LB and 300LB) installed, install the packing gland sleeve, packing flange according to the assembly drawing. Tighten the eyebolt nuts according to Table 2 recommended torque value.

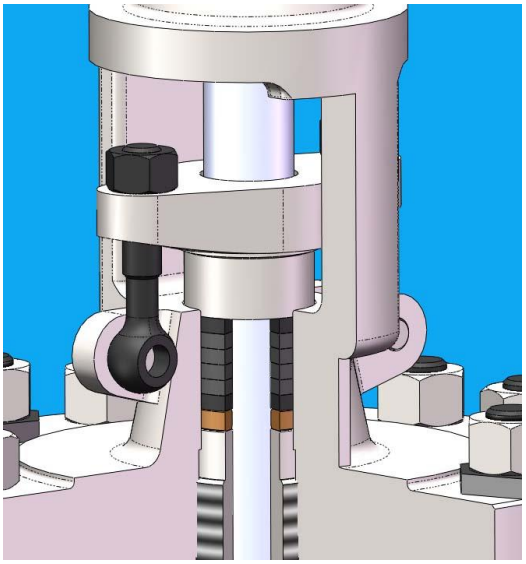

Figure 4 Stem packing detail

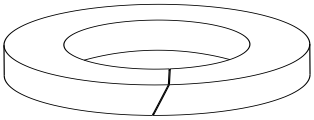

Figure 5 Packing cut（45° cut）

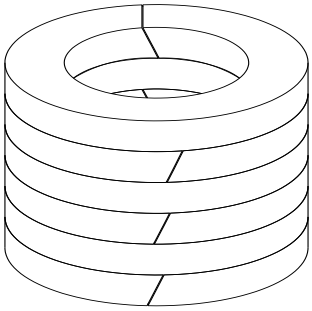

Figure 6 Packing cut location

Table 2 Eyebolt nut tightening torque

DHV	150		300		600		900		1500	
Size	Eyebolt type	Torque	Eyebolt type	Torque	Eyebolt type	Torque	Eyebolt type	Torque	Eyebolt type	Torque
1	-	-	-	-	3/8	26	-	-	-	-
2	-	-	-	-	-	-	-	-	-	-
3	-	-	-	-	-	-	-	-	-	-
4	-	-	5/8	105	5/8	105	-	-	-	-
6	-	-	-	-	3/4	184	-	-	-	-
8	-	-	-	-	1	452	-	-	-	-

7. TROUBLESHOOTING

TROUBLE	PROBABLE CAUSE	REMEDY
Valve leaks during closing	1. Foreign subject at the sealing surface of either ball or seat	1. Clean sealing surface at both ball and seat.
	2. Ball sealing surface damaged	2. Replace with new ball
	3. Stem does not press enough	3. Check valve position indicator at full position
	4. Valve flow direction not agree with line flow direction	4. Reinstall the valve to assure the flow direction is consistent between valve and pipeline.
Valve hard to operate/valve torque too high	1. Valve stem deformed	1. Repair or replace the stem
	2. Valve internal pressure or temperature too high	2. Make sure pressure and temperature are within the range.
	3. Lack of lubrication	3. Add lubrication
	4. Guiding pins are worn out	4. Replace guiding pins
Loud noise due to water hammer or open/close	1. Select wrong valve size or flow speed too high.	1. Assure valve size and flow speed are correct.
Leakage at valve stem	1. Not enough stem packing	1. Inject stem packing
	2. Eyebolt nut loosen	2. Re-tighten the eyebolt nut correctly.
	3. Stem packing expire	3. Replace with new stem packing

8. WARRANTY AND SERVICE

8.1 VALVE WARRANTY PERIOD

8.1.1 Valve warranty period is 12 months from the date shipped from the factory.
8.1.2 In the event the end user encounters an issue of quality, please notify DHV immediately. DHV reserve the right to investigate and settle all issues of quality concerns directly with the end user. Refer to DHV's standard warranty policies for questions or concerns regarding warranty concerns.
8.1.3 Addressing a valve quality issue within the warranty period:
DHV reserves the right to review and respond to all requests for warranty repair or replacement, prior to making any replacement or repairs by the end user.
8.1.4 DHV will not be held responsible for any damage due to natural disaster, such as earthquake, hurricane etc. during valve shipment.
8.1.5 DHV must to be consulted for any warranty issue before being held responsible for any repairs or valve replacement.

8.2 SERVICE

8.2.1 If required by the contract, DHV may provide and perform field installation and start up testing.
8.2.2 Upon end user request, DHV can provide services in monitoring the valve quality and history for Long Term Ownership. Additionally, DHV can provide all the necessary training of repair services to the valve, as well as training on safe valve operations.

APPENDIX I

Installation & Automation Requirements for DHV Ball Valves

Assembly

Includes all non DHV branded hand levers, gearboxes, actuators, and any connecting adaptor plates and/or couplings.

- Gearboxes, actuators and necessary adapters must conform to the valve's ISO pad top work design where applicable.
- It is important that adapter plates and gears should be bolted to the valve's top work plate using the correct bolt size, torque, and tightening pattern.
- Care should be taken at all times to protect the stem from any movement, stress, force or other potential damage while ensuring the stem remains centered in the valve mounting flange during installation.
- Automation mechanisms must be designed, assembled, and supported in a manner as to not exert uneven or unbalanced forces on the valve assembly that could contribute to a side load condition.

NOTE: DHV valve top works fully comply with the requirements set forth in ISO 5211 latest edition. All gears or actuators assembled to DHV valves shall comply with the requirements of ISO 5211 latest edition. Additionally, all gears or actuators shall utilize a spigot return to ensure proper ISO pad alignment on all connections and/or attachments including valve, adapter plates, gearboxes, and actuators. Exceptions may be considered based on order requirements outlined in the purchase order.

Operation

- Personnel installing the operator must ensure there is no abnormal stem movement or run out during operation.
- It is extremely important that all "stops" and or "limits" are correctly set to prevent damage or unnecessary wear to the valve.

Testing

Applies to all methods of hydro testing and pre-commissioning testing.

- Procedures must be compliant to API specifications.
- Always ensure any vents or drains opened during the testing process are securely closed upon completion of the test.

Installation

- Ball valves are best suited for operation in the horizontal position.
- Ball valves must always be either fully open, or fully closed once installed and are not designed or intended for throttling applications.

Shipping

Valves need to be fully open during shipment and actuators need to be braced to support the extra weight at the top end of the valve.

Failure to follow these manufacturer prescribed requirements will void any warranties

DHV Industries, Inc.

3451 Pegasus Drive

Bakersfield, CA 93308 USA

Call Toll Free: (833) DHV-USA1

Phone: (661) 392-8948

Fax: (661) 392-8947

E-mail:sales@dhvindustries.com

Website: www.dhvindustries.com

DHV Valve Company, Inc.

10401 South Sam Houston Pkwy West,

Houston, TX 77071 USA

Call Toll Free: (844) 828-2169

Phone: (346) 304-2968

Fax: (346) 304-2971

E-mail:sales@dhvvalve.com

Website: www.dhvvalve.com

DHV is committed to providing you with the necessary information to support our products. Our global network of authorized service centers, technical support personnel and warranty support personnel are ready to serve your needs for support on applications, products, service and warranty. Contact our USA Bakersfield headquarters for immediate assistance to your support needs.